Code: **NP71-TRM7U**

Trinity - rainfall shower system and thermostatic mixer, chrome

https://www.ferrocompany.com/product-5318-NP71TRM7U.html

Individual packaging: **1, package with bar code allowing for retail sale**

Collective packaginig: **6**

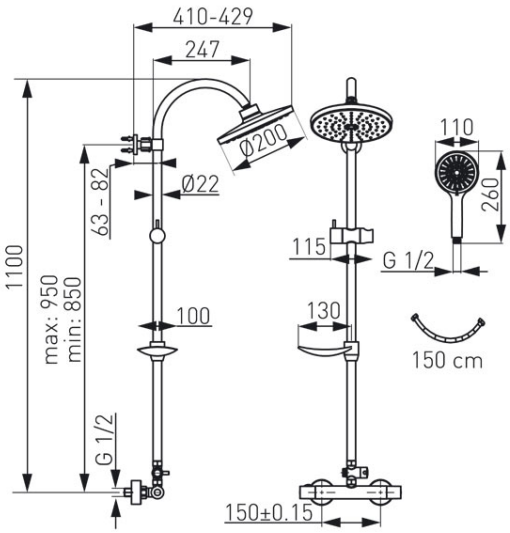

- Rainfall shower:
  - metal bar 1100 mm
  - regulated mounting height
  - regulated distance of rainfall from wall allowing easy mounting
  - shower head plate - Ø 200 mm
  - ball-joint - adjustable angle of overhead shower plate
  - Ferro Easy Clean System - easy limescale removal
  - soapbox
  - metal switch with ceramic insert
- Shower:
  - Shower handle diameter 110 mm
  - 3-function shower handle
  - streams: rain, massage, mixed
  - Ferro Easy Clean System - easy limescale removal
  - 150 cm metal braided shower hose
- Thermostatic mixer:
  - thermostatic regulator
  - Safe Touch System - the body does not heat up
  - Safe Stop 38°C - hot water lock
  - wall-mounting
  - G1/2 eccentric connection spacing 150 ± 20 mm
  - G1/2 shower connection - upper fitting
- chrome